911100 1100 Gallon Vertical Tank

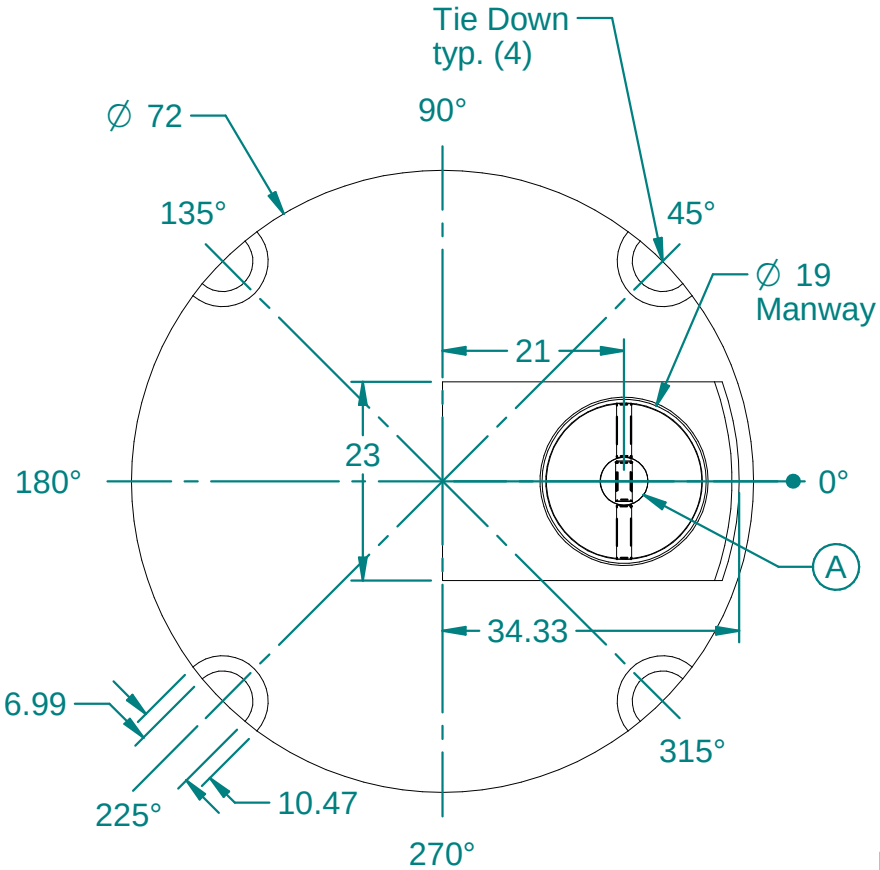

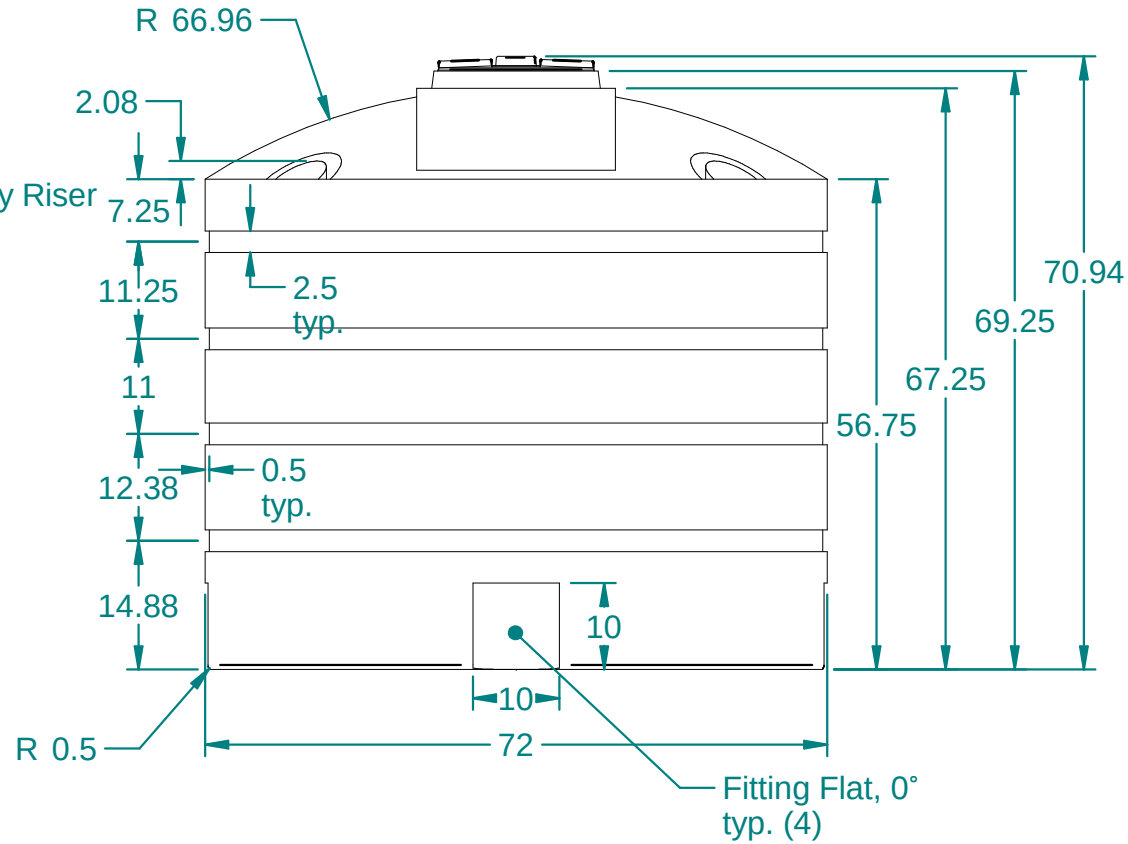

A. 18" HDPE Threaded - Vented Manway W/ 16" Access, Black, W/ SS Screws (P/N 751016)

* Tank fittings to be installed at time of shipment as per Dura-Cast procedures

		NAME	DATE
Weight: Dependent on specific gravity rating			
Wall Thickness: Dependent on specific gravity rating	Drawn By:	mnegron	9/14/2018
Customer Part No: N/A	Customer APPR		
Print Date: 9/17/2018	Copyright@2012 Dura-Cast Products, Inc.		
Comments: - UNLESS OTHERWISE SPECIFIED DIMENSIONS ARE IN INCHES - Std Radii 3/16"	UNLESS OTHERWISE SPECIFIED TOLERANCES ARE DIMS > 10" ±1% DIMS < 10" ±0.100 WALL THICKNESS ± 20% FLATNESS ± .030 in/in		

Dura-Cast Products INC. Rotomolding Plastic for the Future

16160 Hwy 27 Lake Wales, FL. 33859

Customer:	Dura-Cast Products, Inc.
PartTitle:	911100 1100 Gallon Vertical Tank
File Name:	911100 1100 Gallon Vertical Tank - 02.dft
Size: A	Material: HDPE 942
Rev:	
Part No: 911100	Do Not Scale
Sheet: 1 OF 1	